Please specify the following information for inquiry and/or order:

The standard motor specification is written in black and option is in blue.

No.	Item	Inquiry and ordering information
1	Number of Units / Name of Driven Equipment	( ) units /
2	Rated Output / Time Rating	( ) kW / ☐Continuous (S1) , ☐**Other ( )**
3	Rated Voltage / Frequency	( ) V / ( ) Hz
4	Number of Poles / Synchronous Speed	( ) Pole / ( ) min^{-1}
5	Degree of Protection	☐IP44, ☐**Other ( )**
6	Type of Explosion Proof	☐Non-hazardous, ☐**IEC Ex-n,** ☐**Other ( )**
7	Frame Mounting	☐Horizontal Foot-mounted ☐**Other ( )**
8	Location of Installation / Grade of Anti-corrosion	☐Indoor ☐Outdoor ☐**Anti-corrosion, Grade 3, 2, or 1,** ☐**Other ( )**
9	Ambient Temperature	☐–20 — +40°C ☐–10 — +40°C (Self-cooled Sleeve Bearing) ☐**Other ( )**
10	Insulation Class, Temperature Rise	☐Class F, 105K (°C) ☐Class F, 80K (°C) ☐**Other ( )**
11	Method of Motor Starting	☐Direct on line start (DOL) ☐**Other ( )**
12	Starting Torque of Driven Machine	☐$T \propto N^2$ ☐**Torque constant** ☐**Power constant** ☐**Other ( )**
13	Number of Starts	☐Maximum 3 starts/day ☐**Other ( )** Two consecutive starts from cold, and one start from hot
14	Torque Requirement	☐NO ☐**YES, Starting Torque ; ( ) %, Breakdown Torque ; ( ) %**
15	Moment of Inertia of Driven Machine J	☐**Blower / Fan ; ( ) kg·m² (Referred to Motor Shaft)**
16	Speed Control	☐NO ☐**YES ( )**
17	Direction of Rotation Viewed from Drive End	☐Counter clockwise ☐**Clockwise** ☐Reverse Rotation ; ☐YES ☐**NO**
18	Shaft Extension	☐Single End Shaft ☐**Other ( )**
19	Requirement for Bearing	☐NO ☐**YES (☐Oil-lubricated sleeve bearing ☐Other)**
20	Requirement for Terminal Box	☐NO ☐**YES ( )**
21	Requirement for Motor Noise Level	☐NO ☐**YES ( )**
22	Requirement for Motor Painting	☐NO (Color of Top Coat; Munsell Notation N5), ☐**YES ( )**
23	Accessories	☐Shaft Extension key, ☐**Other ( )**
24	Spare Parts Requirement	☐NO ☐**YES ( )**
25	Codes and Standards	☐JIS, JEC, JEM ☐**Other ( )**
26	Customer's Specification	☐NO ☐**YES ( )**
27	Other Requirement	☐NO ☐**YES ( )**

*1 For motors where reduced voltage starting is applicable, please advise Hitachi of the type of the starter and the limit of locked rotor current.
*2 For mills, rollers, and crushers starting under a heavy load, please advise Hitachi of required torque. For motors for reciprocating compressors, torque diagrams need to be provided.

- The pictures in this catalog are inland composite images.
- Contents of this document may be changed without notice for product improvement.
- Descriptions of patent in this document are as of September, 2017.

Hitachi, Ltd.

Industrial Products Business Unit
Industrial Products Sales Management Division
Ueno East tower, 2-16-1, Higashi-Ueno, Taito-ku, Tokyo, 110-0015, Japan
Phone: +81-3-6284-3981

MD-101E	2017.10

Printed in Japan(H)

HITACHI
Inspire the Next

HyMD Series

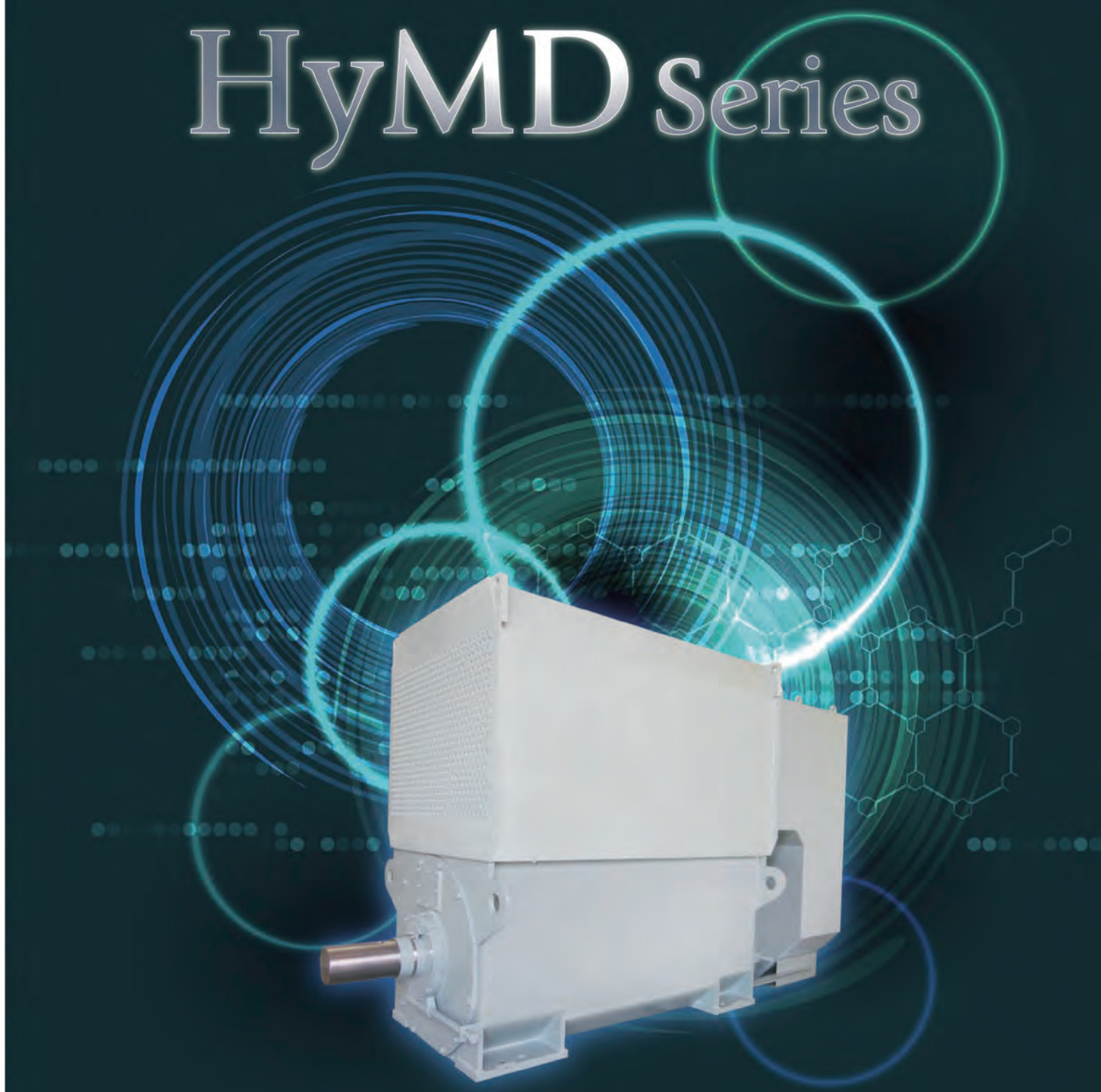

Hitachi Totally Enclosed, Air-To-Air-Cooled Motors

HyMD Series

High-Voltage, Squirrel-Cage, Output: 265 — 11200kW, Frame Number: 400 — 710

High reliability, high efficiency, light weight and compact sized Motor: HyMD Series

The newly developed "HyMD Series" is Totally enclosed air-to-air-cooled high voltage squirrel cage Motor. Compared to our conventional motor of "JS2000 Series", HyMD Series accomplished light weight and compact sized design, short delivery and cost reduction by accumulated knowledge from more than 100 years experience, modular design and parts communalization.

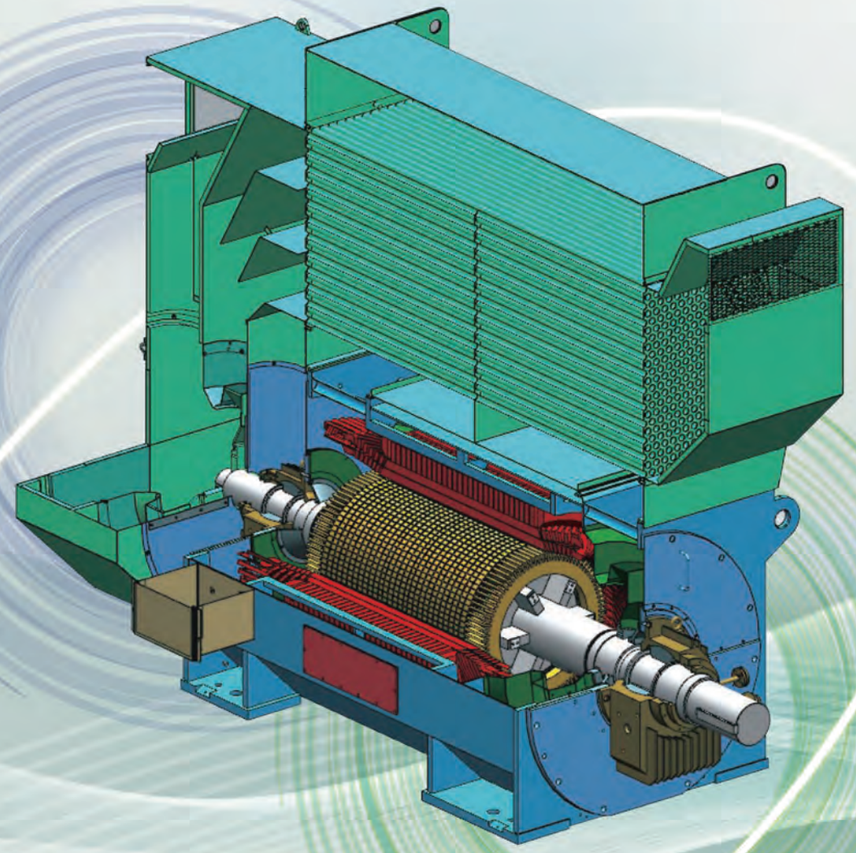

HyMD Series

Totally enclosed motor is able to protect the inside from the ingress of humidity, corrosive gas and dust, and it is suitable for outdoor installation. It provides high level of safety and reduces maintenance rate.

Features

Resource and Space Saving

Light Weight and Compact Sized Design

With accurate analysis of electro magnetic field and ideal construction of the motor cooling system, HyMD Series accomplished 30% of weight reduction compared with our conventional JS 2000 Series based on output comparison.

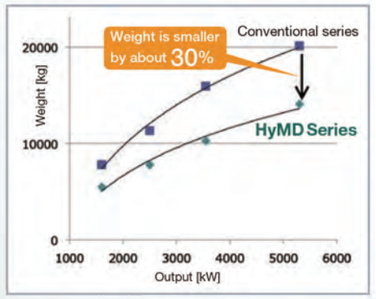

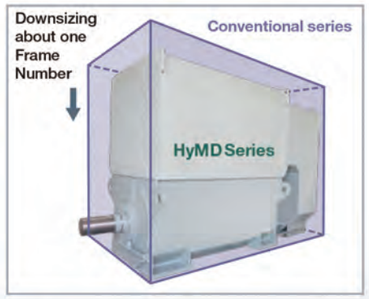

High Reliability

Advanced Technology

Improve the reliability with accumulated knowledge from more than 100 years experience. Accurate design and high quality are also achieved with modular design and parts communalization.

Energy Saving

High Efficiency

Optimized electro magnetic field design, use of high performance cooling fan and magnetic wedges result in reduced motor losses.

Corresponding to Various Requirement

Complying to Codes and Standards

The motor are designed and complying with the various requirements and applicable Codes and Standards such as IEC, NEMA, IEEE, API, etc.

Easy Maintenance

Easy Maintenance for Bearing and Terminal Box

Construction of Bearing is designed for greasing while the motor is running, and it prevents excess grease supply and makes easier for maintenance with grease discharge mechanism.
Also construction of terminal box is designed large enough for cabling work.

Environmental Friendly

Low Noise and Low Vibration

Low noise cooling fan and analysis of electro magnetic field keep ventilation and electromagnetic noise level low. Low vibration level is also kept low with optimized structure using vibration analysis.

Quality Management

ISO Certified

Certified by ISO 9001 (International Quality Standard) and ISO 14001 (Environmental Management System).

Short Delivery

Standardization and Control System

Consistency control system and modular design enable parts standardization, and reduce design and manufacturing time compared with our conventional JS2000 Series.
(Less 1 — 2 months compared with conventional type)

Modular Design

In advance design of each product group enables modular design in which motor parts can be communalized, and combine of analysis technology creates "high performance", "flexibility", "cost saving" and "environmental friendly".
Modular design also has an advantage in its interchangeability, and it enables us to provide attractive products reflecting leading innovation trends.

Standard Motor Specification

Item		Standard Motor Specification
Applicable & Standards	2-pole motors	JIS, JEC, JEM, IEC, NEMA, IEEE
	All other motors	JIS, JEC, JEM, IEC, NEMA, IEEE, API
Degrees of Protection & Method of Cooling		Totally-enclosed (IP4X, IP5X) Air-cooled with air-to-air heat exchanger (IC01,IC611,IC81W)
Rotor Construction		Squirrel Cage
Frame Mounting		Horizonal Foot-mounted (IM B 3)
Rate Voltage		3kV / 6kV / 11kV / 13kV
Frequency		50Hz / 60Hz
Duty Types		Continuous Running Duty (S1)
Type of Explosion Proof		Non Explosion Proof
Insulation Class & Temperature Rise		Class F Insulation, F rise, 105K by resistance method
		Class F Insulation, B rise, 80K by resistance method
Ambient Condition	Ambient Temperature	−20 — +40°C
	Relative Humidity	Max. 95%
	Altitude	Below 1000m
Method of motor Starting		Direct on line start (DOL)
Reduce Voltage Starting		Starting voltage shall be specified
Motor Noise Level	2-pole motors	Avarage noise level 95dB (a) at 1 meter from the machine surface, at no-load
	All other motors	Avarage noise level 90dB (a) at 1 meter from the machine surface, at no-load
	Low Noise Design	Available Upon Request
Terminal Boxes	Mounting Location	On the left hand side viewed from drive end
	Power Cable Entry	From non-drive end
	Terminal Connection	With terminal lugs
	Number of Leads	Three (3)
Bearing	Antifriction Bearing	Grease Lubrication
	Sleeve Bearing	Oil Lubrication
Direction of Rotation		Anti Clockwise viewed from drive end (The fan is unidirectional)
Paint Color of top coat		Munsell Notation N5, Urethane
Accessories		Shaft extension key

Notes:
1) For those motors where special requirements are applicable and /or use in the hazardous location, please contact Hitachi.
2) In case the motor is provided with forced-oil-lubricated sleeve bearings, an oil supply unit is necessary for motor bearing lubrication.
The oil supply units will be supplied by Hitachi upon customer's request.
3) Antifriction bearings are used for the motors with Class F insulation and temperature rise within 80K (°C).

Motor Construction

Motors with Antifriction Bearings

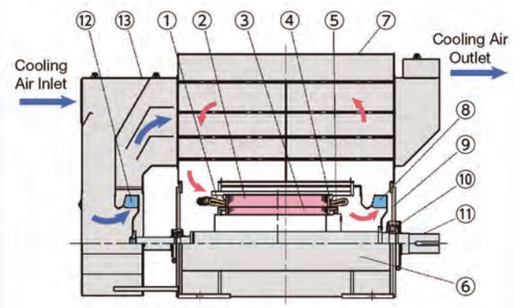

Motors with Sleeve Bearings

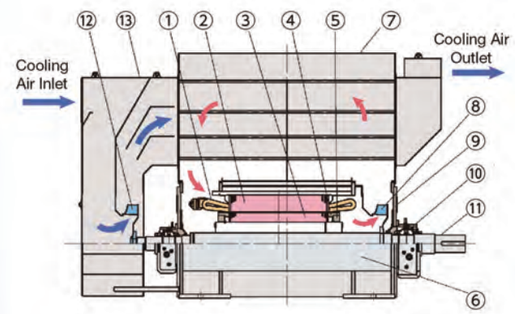

① Stator Windings
② Stator Core Lamination
③ Rotor Core Lamination
④ Rotor Conductor
⑤ Short Circuiting Ring
⑥ Stator Frame
⑦ Air-To-Air Heat Exchanger
⑧ Internal Fan
⑨ Bearing Bracket
⑩ Bearing
⑪ Shaft
⑫ External Fan
⑬ End Cover

Bearing Construction

- Expanded application range for antifriction bearings and bearing life with double bearing construction
- Expanded application range for self-lubricated sleeve bearings

Grease-lubricated Antifriction Bearing

Single bearing Construction

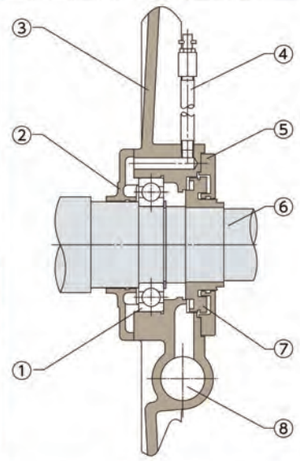

Double bearing Construction

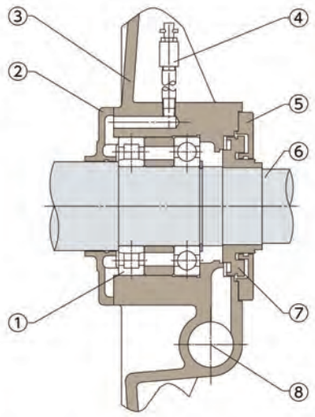

① Bearing
② Internal Bearing Cover
③ Bearing Bracket
④ Grease Inlet Pipe
⑤ Shaft
⑥ Water Slinger Cover
⑦ Water Slinger
⑧ Grease Outlet Pipe (with scraper)

Oil-lubricated Sleeve Bearing

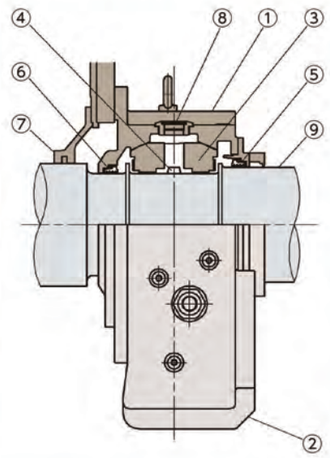

① Bearing cap
② Bearing Box
③ Bearing Shell
④ Oil Ring
⑤ External Bearing Seal
⑥ Internal Bearing Seal
⑦ Machine Seal
⑧ Sight Glass
⑨ Shaft

The illustration shows the typical construction of the bearing. The construction may change slightly by Frame Number, Type-Form and Number of poles.

Motor Output, Frame Number

F rise (105K rise)

3000V 50Hz

Output [kW]	Frame Number					
50Hz	2-pole	4-pole	6-pole	8-pole	10-pole	12-pole
315						400HM
335						
355						
375						400HL
400						
425						
450					400HM	
475						450HM
500						
530					400HL	
560						
600						
630					450HM	
670				400HM		450HL
710						
750						
800				400HL		500HM
850			400HM			
900					450HL	
950						
1000			400HL	450HM		500HL
1060	400HM				500HM	
1120		400HM				
1180						
1250			450HM	450HL		560HM
1320		400HL				
1400					500HL	
1500				500HM		
1600	400HL					560HL
1700		450HM			560HM	
1800			450HL			
1900				500HL	560HL	
2000	450HM					
2120		450HL	500HM			
2240				560HM		
2360						
2500	450HL	500HM				
2650			500HL			
2800				560HL		
3000						
3150						
3350		500HL	560HM			
3550			560HL			
3750						
4000						
4250						
4500						
4750						
5000						
5300						
5600						
6000						
6300						
6700						
7100						
7500						
8000						
8500						
9000						
9500						
10000						
10600						

3300V 60Hz

Output [kW]	Frame Number					
60Hz	2-pole	4-pole	6-pole	8-pole	10-pole	12-pole
375						400HM
400						
425						
450						400HL
475						
500						
530					400HM	
560						450HM
600						
630					400HL	
670						
710						
750					450HM	
800				400HM		450HL
850						
900						
950				400HL		500HM
1000			400HM			
1060					450HL	
1120						
1180	400HM		400HL	450HM		500HL
1250					500HM	
1320		400HM				
1400						
1500			450HM	450HL		560HM
1600		400HL				
1700					500HL	
1800	400HL			500HM		
1900						560HL
2000		450HM			560HM	
2120			450HL			
2240	450HM			500HL	560HL	
2360						
2500		450HL	500HM			
2650	450HL			560HM		
2800						
3000		500HM				
3150			500HL			
3350				560HL		
3550						
3750						
4000		500HL	560HM			
4250			560HL			
4500						
4750						
5000						
5300						
5600						
6000						
6300						
6700						
7100						
7500						
8000						
8500						
9000						
9500						
10000						
10600						
11200						

The part out of the coverage, Please contact Hitachi.

6000V 50Hz

Output [kW]	Frame Number					
50Hz	2-pole	4-pole	6-pole	8-pole	10-pole	12-pole
315						400HM
335						
355						
375						400HL
400						
425						
450					400HM	
475						450HM
500						
530					400HL	
560						
600						
630					450HM	
670				400HM		450HL
710						
750						
800				400HL		500HM
850			400HM			
900					450HL	
950						
1000	400HM		400HL	450HM		500HL
1060					500HM	
1120		400HM				
1180						
1250			450HM	450HL		560HM
1320		400HL				
1400					500HL	
1500	400HL			500HM		
1600						560HL
1700		450HM			560HM	
1800			450HL			
1900	450HM			500HL	560HL	
2000						630HM
2120		450HL	500HM			
2240				560HM		
2360	450HL				630HM	
2500		500HM				630HL
2650			500HL			
2800				560HL		
3000	500HL					
3150						710HM
3350		500HL	560HM		630HL	
3550			560HL	630HM		710HL
3750		560HM				
4000					710HM	
4250		560HL				
4500			630HM	630HL	710HL	
4750						
5000						
5300		630HM				
5600			630HL	710HM		
6000						
6300		630HL		710HL		
6700						
7100			710HM			
7500		710HM				
8000						
8500			710HL			
9000		710HL				
9500						
10000						
10600						

6600V 60Hz

Output [kW]	Frame Number					
60Hz	2-pole	4-pole	6-pole	8-pole	10-pole	12-pole
375						400HM
400						
425						
450						400HL
475						
500						
530					400HM	
560						450HM
600						
630					400HL	
670						
710						
750					450HM	
800				400HM		450HL
850						
900						
950				400HL		500HM
1000			400HM			
1060					450HL	
1120	400HM					
1180			400HL	450HM		500HL
1250					500HM	
1320		400HM				
1400						
1500			450HM	450HL		560HM
1600		400HL				
1700	400HL				500HL	
1800				500HM		
1900						560HL
2000		450HM			560HM	
2120	450HM		450HL			
2240				500HL	560HL	
2360						630HM
2500		450HL	500HM			
2650				560HM		
2800	450HL				630HM	
3000		500HM				630HL
3150			500HL			
3350				560HL		
3550	500HL					
3750						710HM
4000		500HL	560HM		630HL	
4250			560HL	630HM		710HL
4500		560HM				
4750					710HM	
5000		560HL				
5300			630HM	630HL	710HL	
5600						
6000						
6300		630HM	630HL			
6700				710HM		
7100						
7500		630HL		710HL		
8000			710HM			
8500						
9000		710HM				
9500			710HL			
10000						
10600						
11200						

The part out of the coverage, Please contact Hitachi.

Motor Output, Frame Number

B rise (80K rise)

3000V 50Hz

Output [kW]	Frame Number					
50Hz	2-pole	4-pole	6-pole	8-pole	10-pole	12-pole
265						400HM
280						
300						
315						400HL
335						
355						
375					400HM	
400						450HM
425						
450					400HL	
475						
500						
530					450HM	
560				400HM		450HL
600						
630						
670				400HL		500HM
710			400HM			
750					450HL	
800						
850			400HL	450HM		500HL
900					500HM	
950	400HM	400HM				
1000						
1060			450HM	450HL		560HM
1120		400HL				
1180					500HL	
1250				500HM		
1320						560HL
1400	400HL	450HM			560HM	
1500			450HL			
1600				500HL	560HL	
1700						
1800	450HM	450HL	500HM			
1900				560HM		
2000						
2120		500HM				
2240	450HL		500HL			
2360				560HL		
2500						
2650						
2800		500HL	560HM			
3000			560HL			
3150						
3350						
3550						
3750						
4000						
4250						
4500						
4750						
5000						
5300						
5600						
6000						
6300						
6700						
7100						
7500						
8000						
8500						
9000						

3000V 60Hz

Output [kW]	Frame Number					
60Hz	2-pole	4-pole	6-pole	8-pole	10-pole	12-pole
315						400HM
335						
355						
375						400HL
400						
425						
450					400HM	
475						450HM
500						
530					400HL	
560						
600						
630					450HM	
670				400HM		450HL
710						
750						
800				400HL		500HM
850			400HM			
900					450HL	
950						
1000			400HL	450HM		500HL
1060	400HM				500HM	
1120		400HM				
1180						
1250			450HM	450HL		560HM
1320		400HL				
1400					500HL	
1500				500HM		
1600	400HL					560HL
1700		450HM			560HM	
1800			450HL			
1900				500HL	560HL	
2000	450HM					
2120		450HL	500HM			
2240				560HM		
2360						
2500		500HM				
2650	450HL		500HL			
2800				560HL		
3000						
3150						
3350		500HL	560HM			
3550			560HL			
3750						
4000						
4250						
4500						
4750						
5000						
5300						
5600						
6000						
6300						
6700						
7100						
7500						
8000						
8500						
9000						
9500						

The part out of the coverage, Please contact Hitachi.

6000V 50Hz

Output [kW]	Frame Number					
50Hz	2-pole	4-pole	6-pole	8-pole	10-pole	12-pole
265						400HM
280						
300						
315						400HL
335						
355						
375					400HM	
400						450HM
425						
450					400HL	
475						
500						
530					450HM	
560				400HM		450HL
600						
630						
670				400HL		500HM
710			400HM			
750					450HL	
800						
850			400HL	450HM		500HL
900	400HM				500HM	
950		400HM				
1000						
1060			450HM	450HL		560HM
1120		400HL				
1180					500HL	
1250				500HM		
1320	400HL					560HL
1400		450HM			560HM	
1500			450HL			
1600				500HL	560HL	
1700	450HM					630HM
1800		450HL	500HM			
1900				560HM		
2000					630HM	
2120	450HL	500HM				630HL
2240			500HL			
2360				560HL		
2500						
2650	500HL					710HM
2800		500HL	560HM		630HL	
3000			560HL	630HM		710HL
3150		560HM				
3350					710HM	
3550		560HL				
3750			630HM	630HL	710HL	
4000						
4250						
4500		630HM				
4750			630HL	710HM		
5000						
5300		630HL		710HL		
5600						
6000			710HM			
6300		710HM				
6700						
7100			710HL			
7500		710HL				
8000						
8500						
9000						

6600V 50Hz

Output [kW]	Frame Number					
60Hz	2-pole	4-pole	6-pole	8-pole	10-pole	12-pole
315						400HM
335						
355						
375						400HL
400						
425						
450					400HM	
475						450HM
500						
530					400HL	
560						
600						
630					450HM	
670				400HM		450HL
710						
750						
800				400HL		500HM
850			400HM			
900					450HL	
950						
1000	400HM			400HL	450HM	500HL
1060						500HM
1120		400HM				
1180						
1250			450HM	450HL		560HM
1320		400HL				
1400					500HL	
1500	400HL			500HM		
1600						560HL
1700		450HM			560HM	
1800			450HL			
1900	450HM			500HL	560HL	
2000						630HM
2120		450HL	500HM			
2240				560HM		
2360					630HM	
2500	450HL	500HM				630HL
2650			500HL			
2800				560HL		
3000						
3150	500HL					710HM
3350		500HL	560HM		630HL	
3550			560HL	630HM		710HL
3750		560HM				
4000					710HM	
4250		560HL				
4500			630HM	630HL	710HL	
4750						
5000						
5300		630HM	630HL			
5600				710HM		
6000						
6300		630HL		710HL		
6700			710HM			
7100						
7500		710HM				
8000			710HL			
8500						
9000						
9500						

The part out of the coverage, Please contact Hitachi.

Dimensions Drawings (Unit: mm)

Motors with Antifriction Bearings

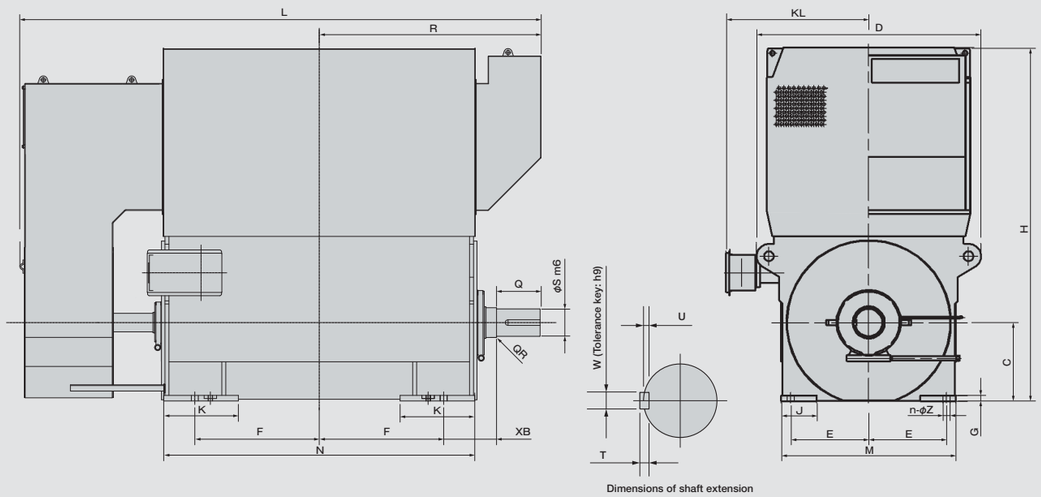

Motors with Sleeve Bearings

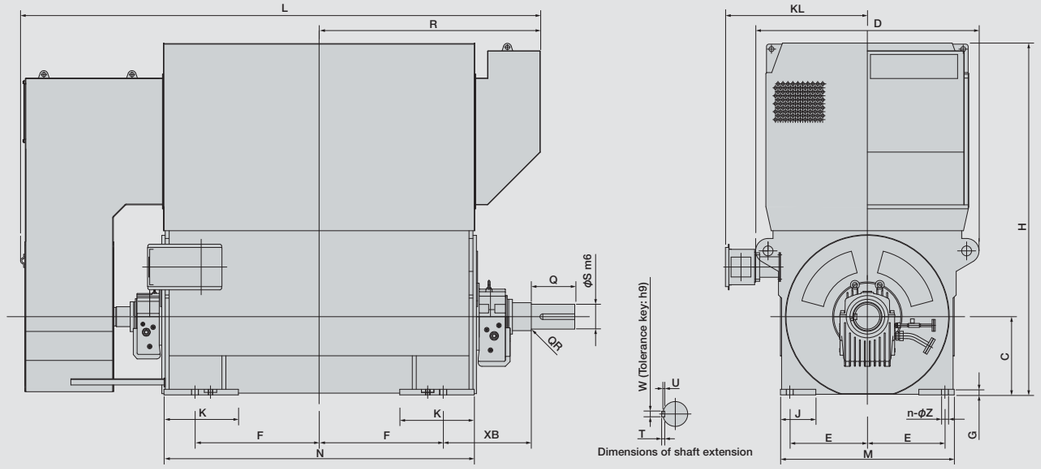

2-Pole motors, 95dB (a)

Frame Number	Number of Poles	Motor Dimensions																	Dimensions of shaft extension						Bearing
		C	Tolerance	D	E	F	G	H	J	K	KL	L	M	N	R	XB	n	Z	Q	QR	S	T	U	W	
400HM	2	400	0 — 1.0	1460	425	625	42	1700	220	355	1000	2550	1000	1500	1015	250	4	35	140	1	75	12	7.5	20	G
400HM	2	400		1460	425	625	42	1700	220	355	1000	2850	1000	1500	1130	335	4	35	170	2	90	14	9	25	F
400HL	2	400		1460	425	700	42	1700	220	355	1000	3150	1000	1750	1310	400	6	35	210	4	100	16	10	28	F
450HM	2	450		1580	475	700	42	1850	250	360	1100	3200	1120	1760	1310	400	6	42	210	4	100	16	10	28	F
450HL	2	450		1580	475	800	42	1850	250	375	1100	3400	1120	1960	1410	400	6	42	210	4	110	16	10	28	F
500HL	2	500		1750	560	700	40	1950	215	475	1150	3800	1300	2120	1625	475	8	42	250	5	140	20	12	36	F

4 — 12-Pole motors, 90dB (a)

Frame Number	Number of Poles	Motor Dimensions																	Dimensions of shaft extension						Bearing
		C	Tolerance	D	E	F	G	H	J	K	KL	L	M	N	R	XB	n	Z	Q	QR	S	T	U	W	
400HM	4	400	0 — 1.0	1300	400	560	35	1958	180	375	894	2726	900	1500	1125	355	4	35	210	2	120	18	11	32	G
	6 — 12											2476							210	2	125	18	11	32	G
400HL	4	400		1300	400	625	35	1958	180	375	894	2911	900	1700	1210	375		35	210	2	120	18	11	32	G
	6 — 12											2661							210	2	125	18	11	32	G
450HM	4	450		1400	450	625	40	2146	200	425	944	3076	1000	1700	1325	450		42	250	2	140	20	12	36	G
	6 — 12											2750			1275	400			250	2	150	20	12	36	G
450HL	4	450		1400	450	700	40	2146	200	425	944	3276	1000	1900	1425	475		42	250	2	140	20	12	36	G
	6 — 12											2950			1375	425			250	2	150	20	12	36	G
500HM	4	500		1520	500	700	40	2342	225	475	1004	3581	1120	1900	1670	670		50	300	2	160	22	13	40	F
	6											3336			1425	425		48	300	2	170	22	13	40	G
	8 — 12											3026							300	2	170	22	13	40	G
500HL	4	500		1520	500	800	40	2342	225	475	1004	3791	1120	2120	1770	670		50	300	2	160	22	13	40	F
	6											3546			1525	425		48	300	2	170	22	13	40	G
	8 — 12											3236							300	2	170	22	13	40	G
560HM	4	560		1650	560	800	45	2586	250	530	1069	3806	1250	2000	1730	630		56	300	2	180	25	15	45	F
	6											3856			1780				350	2	200	25	15	45	F
	8											3601			1525	375		56	350	2	200	25	15	45	G
	10 — 12											3251							350	2	200	25	15	45	G
560HL	4	560		1650	560	900	45	2586	250	530	1069	4066	1250	2240	1870	670		56	300	2	180	25	15	45	F
	6											4116			1920				350	2	200	25	15	45	F
	8											3846			1650	400		56	350	2	200	25	15	45	G
	10 — 12											3496							350	2	200	25	15	45	G
630HM	4	630		1800	625	900	45	2834	285	600	1144	4196	1400	2240	1920	670		56	350	2	200	25	15	45	F
	6											4276			2000	750			350	2	220	28	17	50	F
	8											3926			1650	400		56	350	2	220	28	17	50	G
	10 — 12											3531							350	2	220	28	17	50	G
630HL	4	630	0 –1.5	1800	625	1000	45	2834	285	600	1144	4466	1400	2500	2060	710		56	350	2	200	25	15	45	F
	6											4506			2100	750			350	2	220	28	17	50	F
	8											4181			1775	425		56	350	2	220	28	17	50	G
	10 — 12											3786							350	2	220	28	17	50	G
710HM	4	710		2000	700	1000	50	3134	320	670	1244	4646	1600	2500	2150	800		56	350	2	220	28	17	50	F
	6 — 8											4706			2210				410	2	250	32	20	56	F
	10 — 12																		410	2	250	32	20	56	F
710HL	4			2000	700	1120	50	3134	320	670	1244	4916	1600	2800	2270	800		56	350	2	220	28	17	50	F
	6 — 8											4976			2330				410	2	250	32	20	56	F
	10 — 12																		410	2	250	32	20	56	F

Notes: The illustration shows the typical construction of the motor.
The construction may change slightly by Frame Number, Type-Form and number of poles.

G: Grease-lubricated antifriction bearing
F: Forced-oil-lubricated sleeve bearing